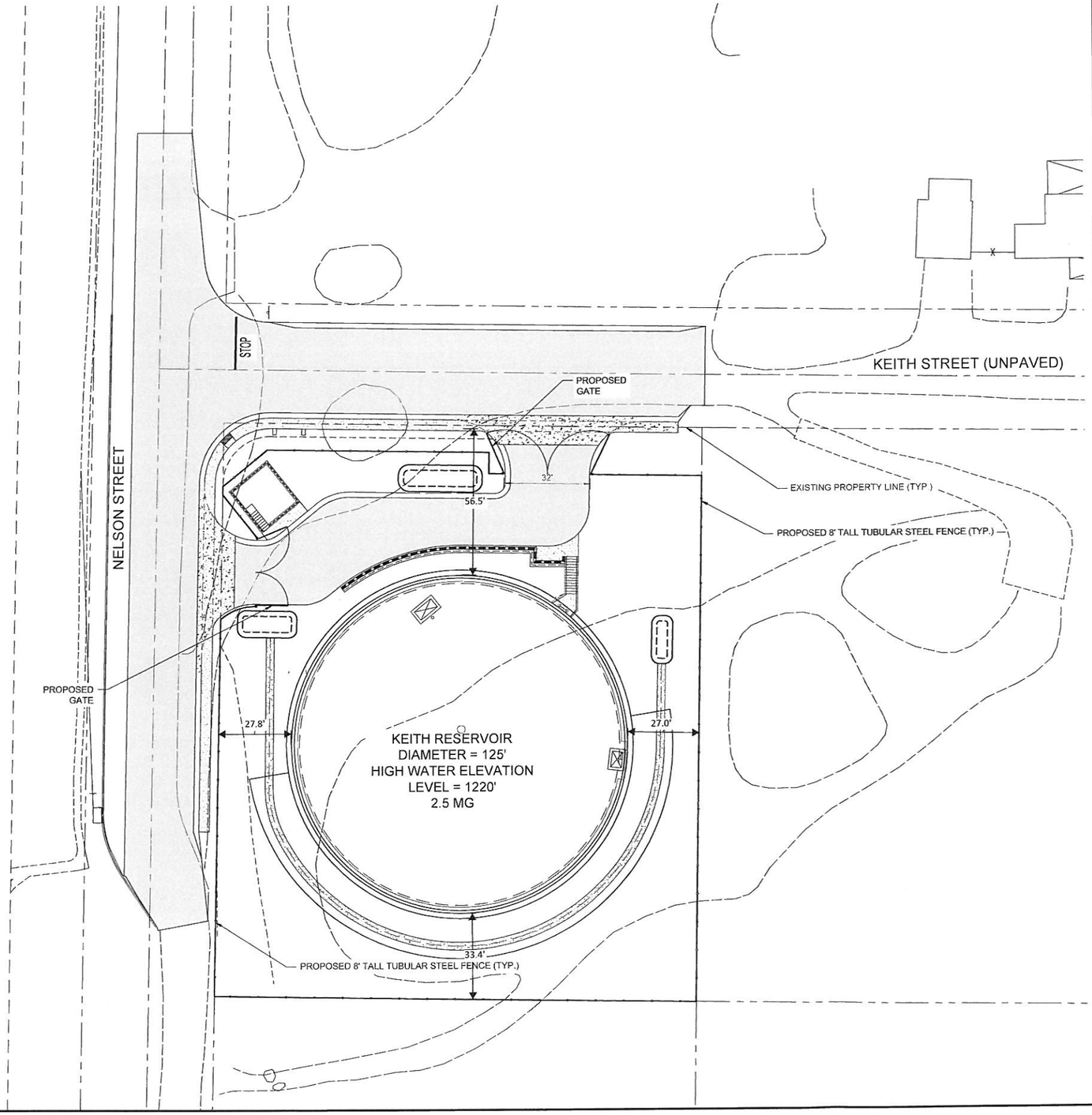

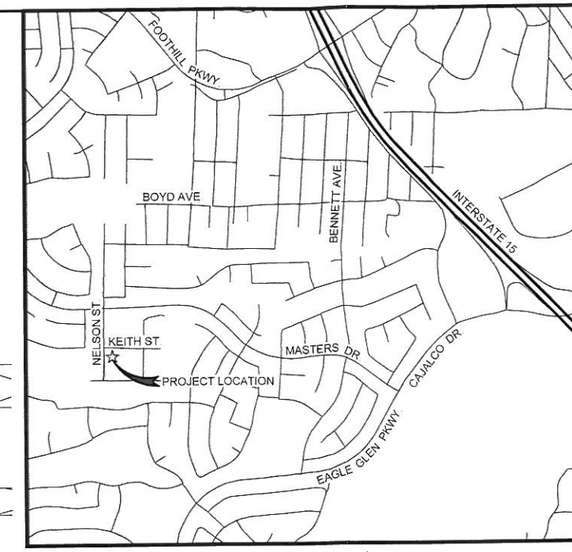

VICINITY MAP
NOT TO SCALE

PROJECT INFORMATION	
A.P.N.:	116-113-001
SITE ADDRESS:	3985 NELSON STREET, CORONA, CA 92851
SITE ACREAGE:	0.9 ACRES
ZONE DESIGNATION:	R1A
PROPOSED USE:	UTILITY
GENERAL PLAN DESIGNATION:	ER - ESTATE RESIDENTIAL
LOT COVERAGE (STRUCTURE SIZE/LOT SIZE)	34%
STRUCTURE HEIGHT	30-36 FEET, PARTIALLY BURIED
STRUCTURE GROSS FLOOR AREA	13,478 SQUARE FEET

APPLICANT/OWNER:
CITY OF CORONA DWP
755 PUBLIC SAFETY WAY, CORONA, CA 92880

APPLICANT/OWNER CONTACT:
VERNON WEISMAN AND MAYRA CABRERA
PH: 951-739-4912/951-739-4842
EMAIL: VERNON.WEISMAN@CI.CORONA.CA.US AND
MAYRA.CABRERA@CI.CORONA.CA.US

ENGINEER:
KLEINFELDER
550 W C STREET, SUITE 1200, SAN DIEGO, CA 92101

ENGINEER CONTACT:
MARC WEINBERGER
PH: 619-831-4600
EMAIL: MWEINBERGER@KLEINFELDER.COM

KLEINFELDER
Bright People. Right Solutions.
550 West C Street, Suite 1200
San Diego, CA 92101
Phone: 619-831-4600
www.kleinfelder.com

REVISIONS

REV	DESCRIPTION	DSN / DWN	CHK / APP	DATE

CORONA
"THE CIRCLE CITY"
Incorporated July 13, 1896
To Cherish Our Past - To Plan Our Future

SCALE VERIFICATION
THIS BAR IS 1 INCH IN LENGTH ON ORIGINAL DRAWING
0 1"
IF IT'S NOT 1 INCH ON THIS SHEET ADJUST YOUR SCALES ACCORDINGLY

0 20 40 60
SCALE 1" = 20 SCALE IN FEET
ORIGINAL DRAWING SIZE IS 24 x 36

KEITH 1220-ZONE POTABLE WATER TANK

PRELIMINARY FENCE PLAN

PROJECT NO.	20170167.001A
ISSUE DATE	05/30/2018
CURRENT REVISION	1
DESIGNED BY	BO
DRAWN BY	BO
CHECKED BY	MW
APPROVED BY	MW

SHEET of

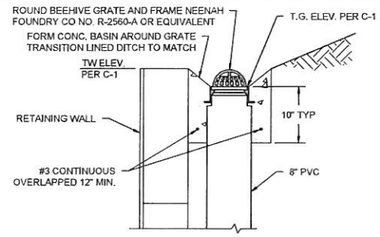

NOTE.
1. CONCRETE SHALL BE CLASS 470-C-2000.

1 BEEHIVE GRATE BEHIND RETAINING WALL

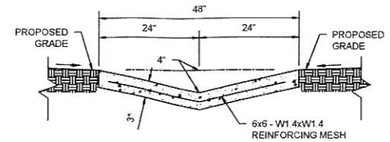

NOTE.
1. CONCRETE SHALL BE CLASS 560-C-3250.

2 CONCRETE DRAINAGE SWALE

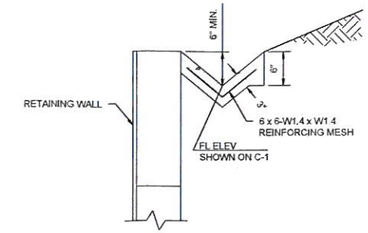

NOTE.
1. CONCRETE SHALL BE CLASS 470-C-2000.

3 BROW DITCH

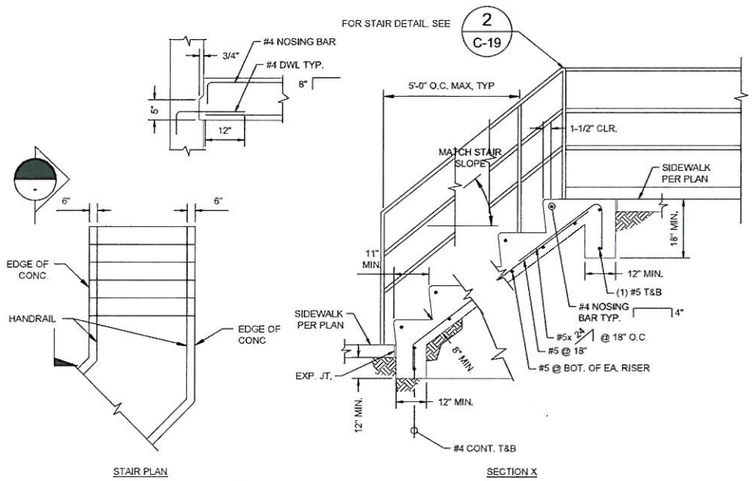

NOTES:
1. BROOM FINISH ON TREADS, TROWEL FINISH ON ALL OTHER EXPOSED SURFACES.
2. RISERS ARE TO BE 4" MINIMUM, 7" MAXIMUM.
3. FROM NOSE OF EACH STEP, ADD A TYPICAL 3" BORDER OF HIGHLY CONTRASTING COLOR PLACED PARALLEL TO ADD NOT MORE THAN 1" FROM NOSE.
4. CONCRETE SHALL BE CLASS 560-C-3250.

4 TYP. CONCRETE STAIR ON GRADE

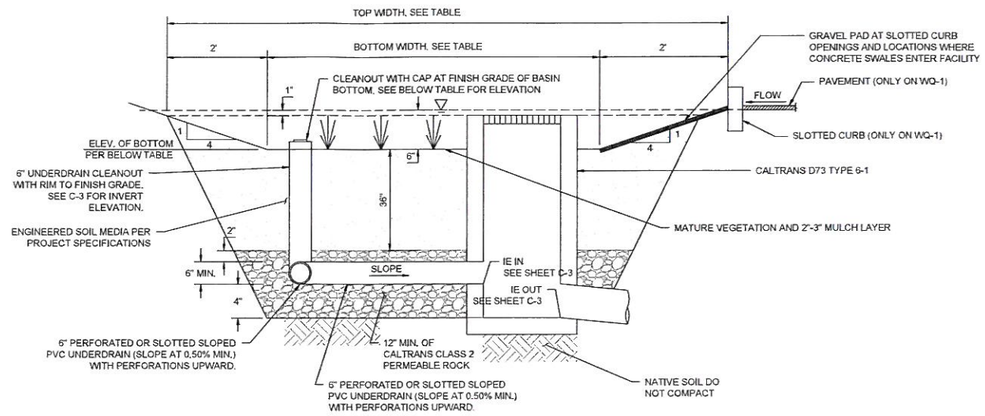

BIORETENTION FACILITY TABLE				
BMP ID	TOP WIDTH (FT)	BOTTOM WIDTH (FT)	TOP LENGTH (FT)	ELEV. OF BOTTOM (FT)
WQ-1	8	4	47.5	1187.9
WQ-2	12	8	17	1192.4
WQ-3	8	4	18	1203.5

NOTES
1. BOTTOM OF FACILITY TO BE FLAT.

5 BIORENTENTION FACILITY

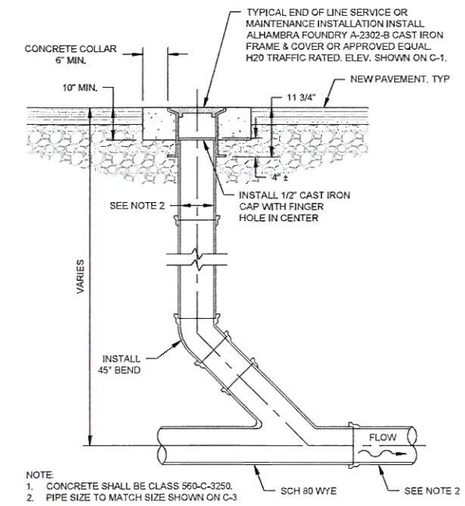

NOTE:
1. CONCRETE SHALL BE CLASS 560-C-3250.
2. PIPE SIZE TO MATCH SIZE SHOWN ON C-3

6 CLEANOUT IN PAVEMENT

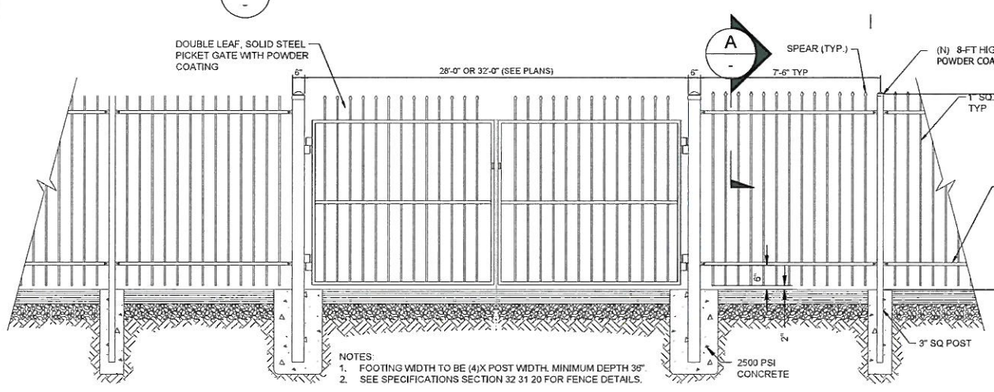

NOTES:
1. FOOTING WIDTH TO BE (4)X POST WIDTH, MINIMUM DEPTH 36".
2. SEE SPECIFICATIONS SECTION 32 31 20 FOR FENCE DETAILS.

7 GATE ELEVATION

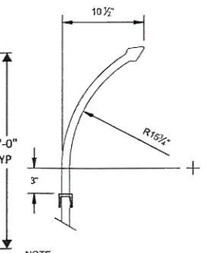

NOTE:
PICKET FENCE AND GATE PER SPECIFICATIONS SECTION 32 31 20.

A SECTION

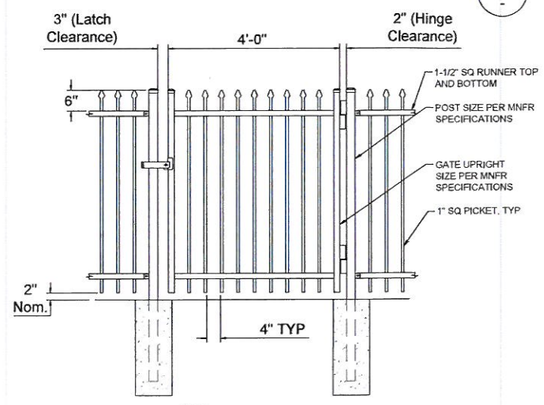

NOTE
PERSONNEL GATE PER SPECIFICATIONS SECTION 32 31 20, FOR INFORMATION NOT NOTED, SEE DETAIL 7

8 PERSONNEL GATE

Underground Service Alert
Call: TOLL FREE
1-800
422-4133
TWO WORKING DAYS BEFORE YOU DIG

24x36 FORMAT
IF THIS BAR MEASURES 1" THEN DRAWING SCALE IS AS NOTED

12x18 FORMAT - WARNING
IF THIS BAR MEASURES ½" THEN DRAWING IS NOT FULL SCALE AND IS 50% REDUCED

Designed By	Drawn By	Checked By
PLANS PREPARED UNDER SUPERVISION OF		
DATE	R.C.E.	

Reference Plans for These Improvements

Date	By	Revisions	App'd

KLEINFELDER Bright People. Right Solutions.

APPROVED BY: PUBLIC WORKS
DATE
NELSON D. NELSON, P.E.
PUBLIC WORKS DIRECTOR
R.C.E. 54435

APPROVED BY: DEPARTMENT OF WATER AND POWER
DATE
VERNON R. WEISMAN, P.E.
DISTRICT ENGINEER
R.C.E. 41910

CITY OF CORONA
KEITH 1220-ZONE POTABLE WATER TANK
CIVIL DETAILS

C-18